RoHS 2015/863/EU REACH compliant Conflict minerals free

GEYER quartz technology

Quartz Crystal

SMD-version

part no.	12.xxxxx
model	KX – 327L
frequency	32.768 kHz
operating temperature	standard -20° ~ +70°C available -40° ~ +85°C (= KX-327LT)
frequency tolerance at +25°C	standard ±20 ppm available ±5, ±10 ppm
temperature tolerance (parabolic coefficient)	(-0.033 ±10 %) × 10^{-6} / °C^2
turnover temperature	+25°C ±5°C
storage temperature range	-55°C ~ +125°C
load capacitance C_L	7 pF ~ 12.5 pF
series resistance R1 (ESR)	50k Ohm typ., 65k Ohm max.
shunt capacitance C_0 typ.	0.8 pF
aging at +25°C (first year) max.	±3 ppm
drive level max.	1µW
contents of reel	3000 pcs.

Dimensions (mm):

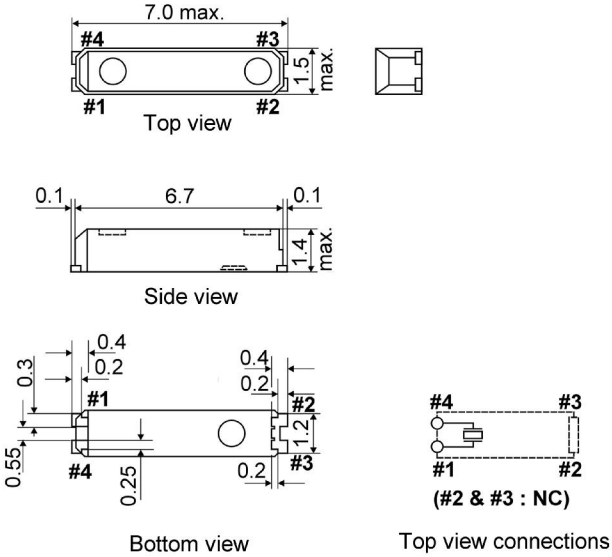

Suggested soldering pad:

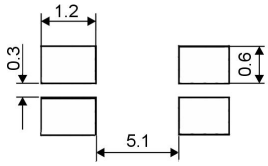

Reflow soldering condition:

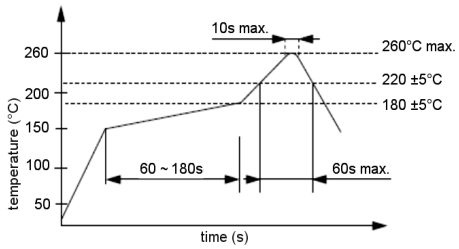

Tape specification:

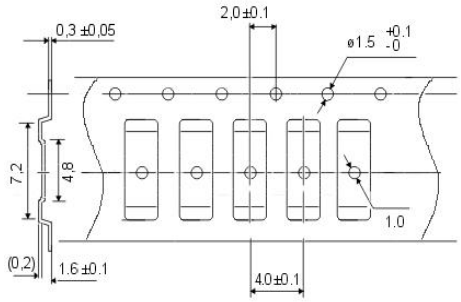

reel diameter 180 mm

GEYER Electronic GmbH Behringstraße 6 D-82152 Planegg / München
Tel. +49 89 546868-0 quartz@geyer-electronic.de www.geyer-electronic.de